Flygon

3D Editing by Brandon
Template by Lyrin



PaperPokés
www.pokemonpapercraft.com

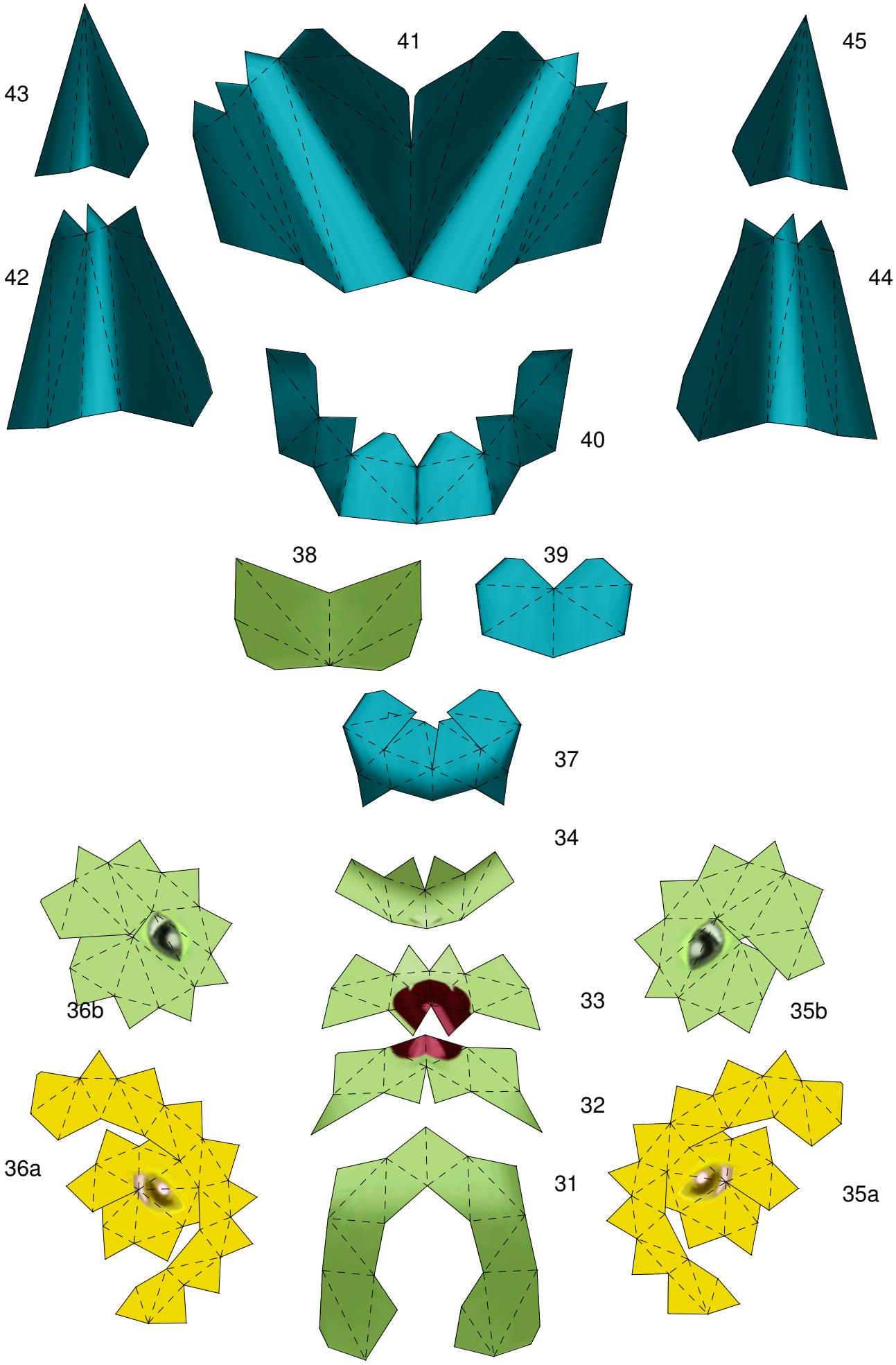
43
41
45
42
44
40
38
39
37
34
36b
33
35b
32
36a
31
35a

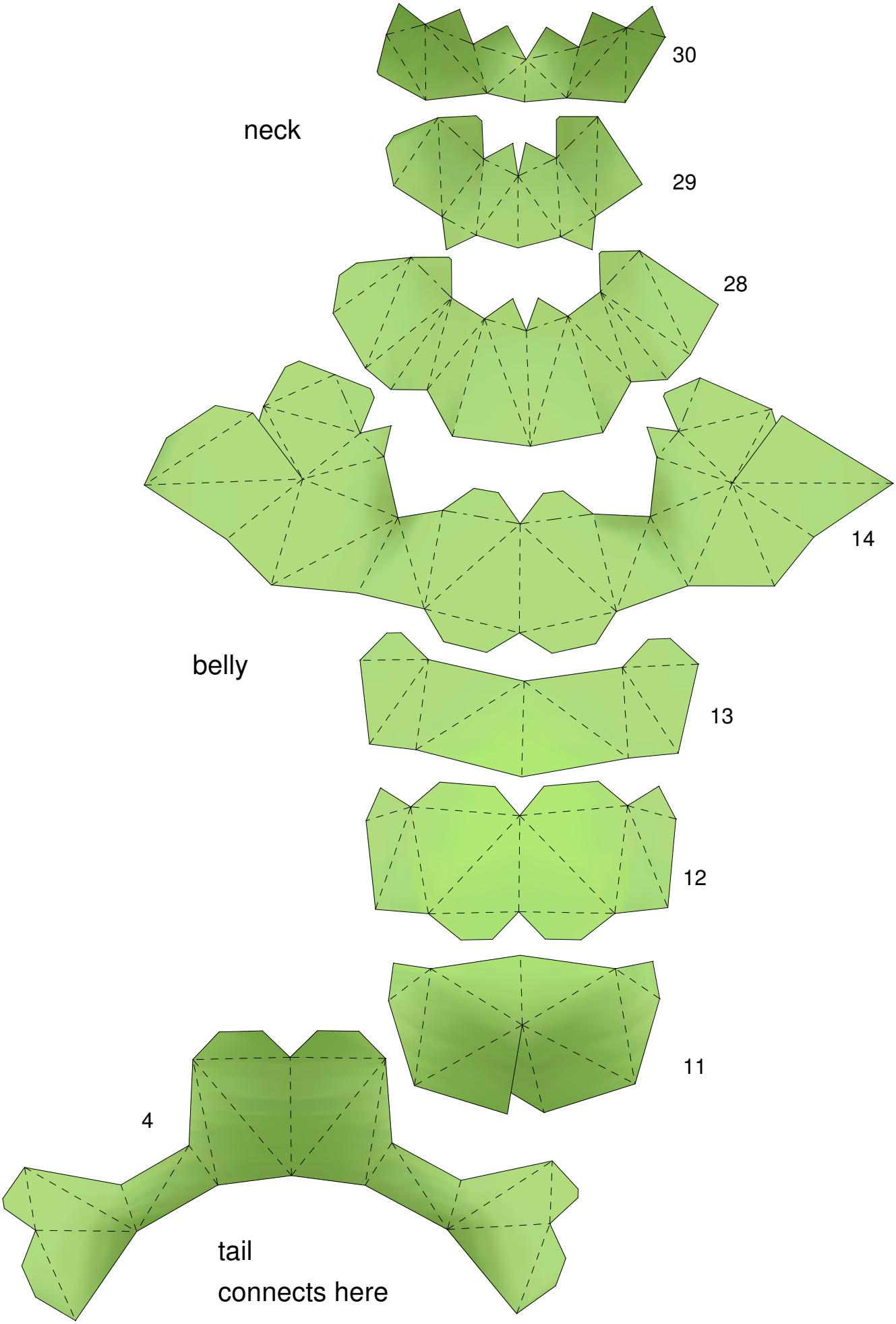
30
neck
29
28
14
belly
13
12
11
4
tail
connects here

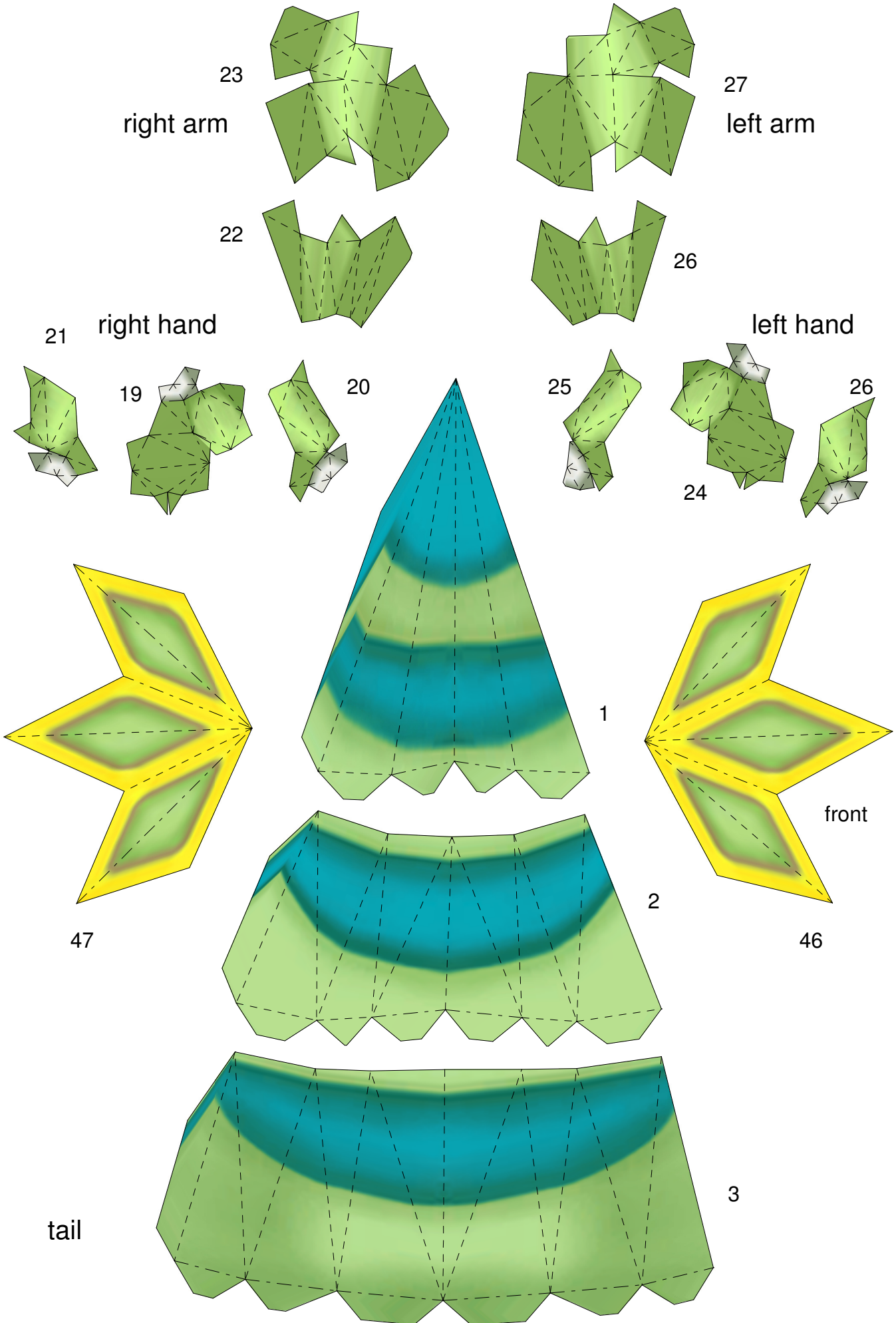
23
right arm
27
left arm
22
26
21
right hand
left hand
19
20
25
26
24
1
front
47
2
46
3
tail

7

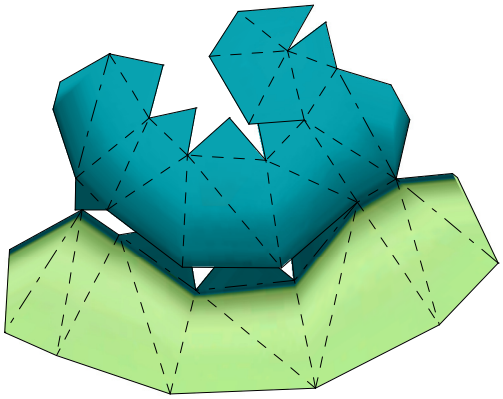

10

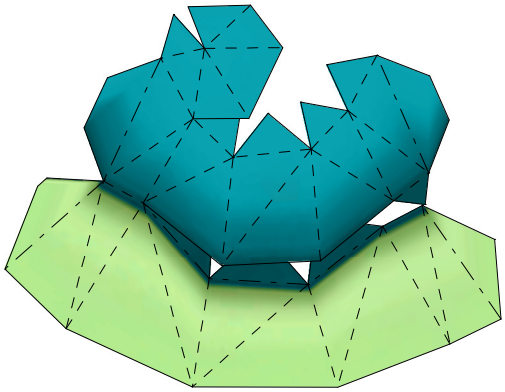

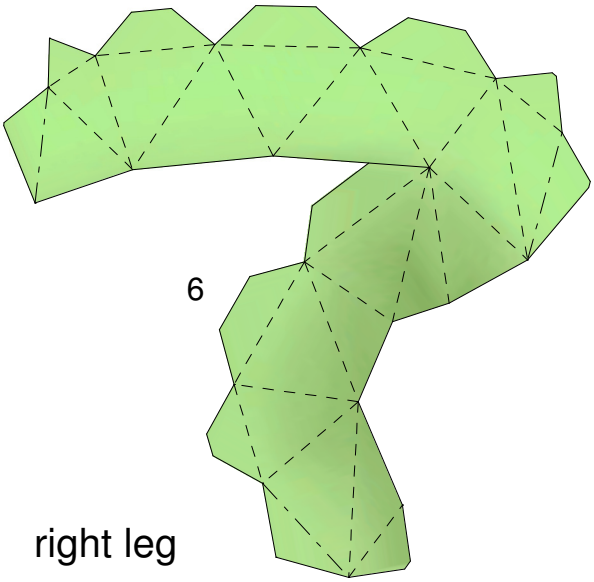

6

right leg

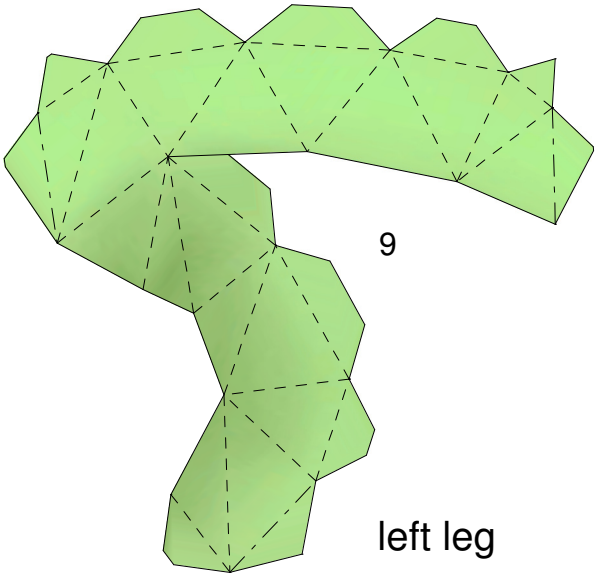

9

left leg

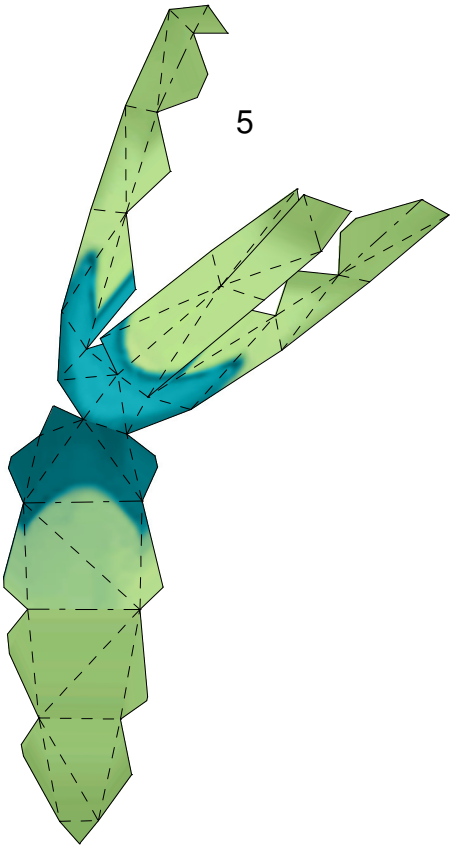

5

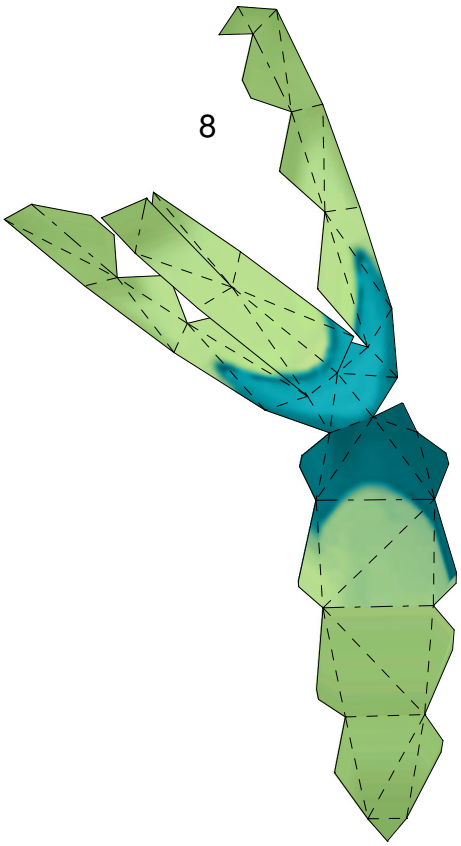

8

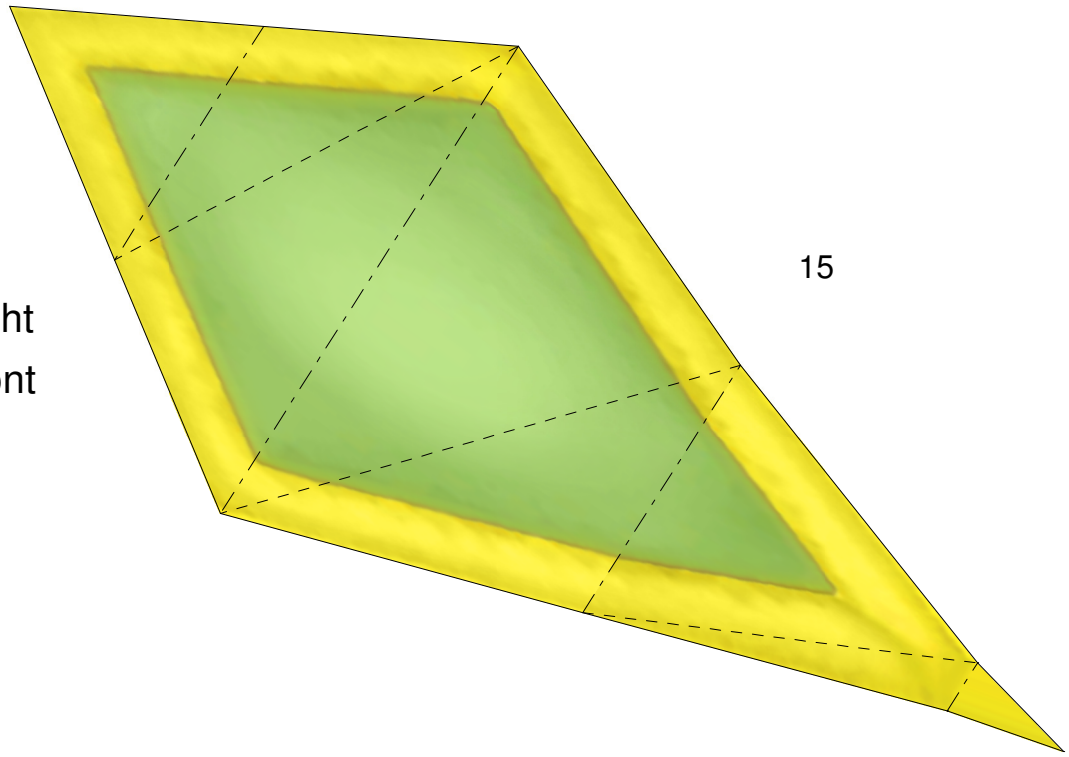

15

right
front

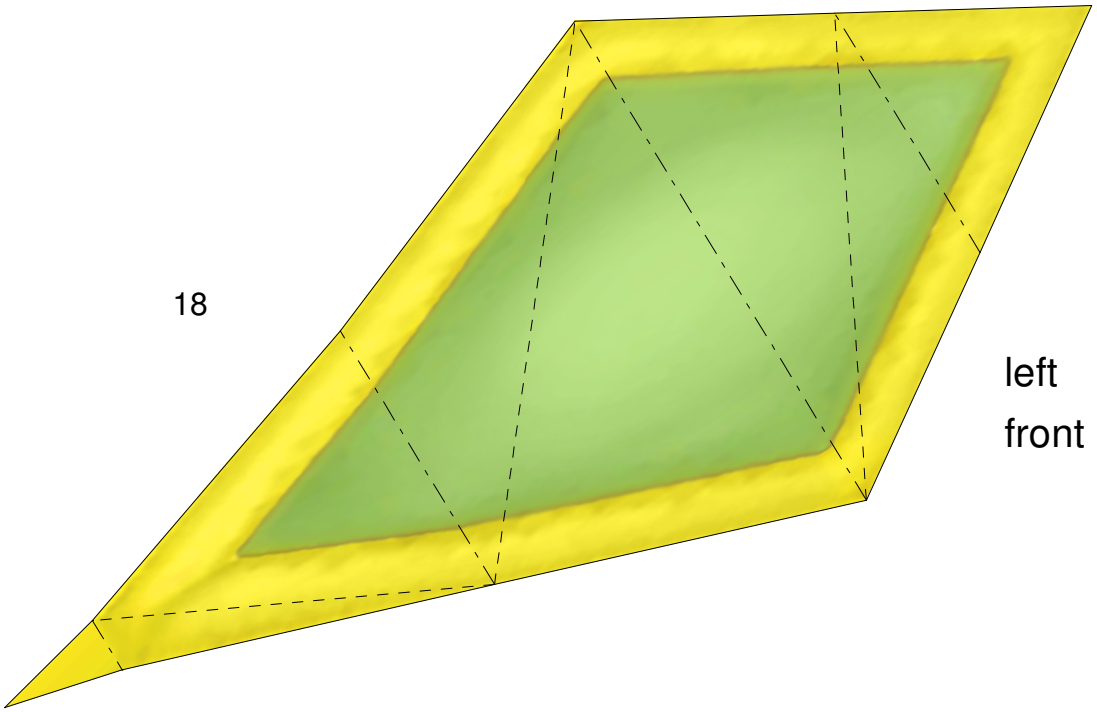

18

left
front

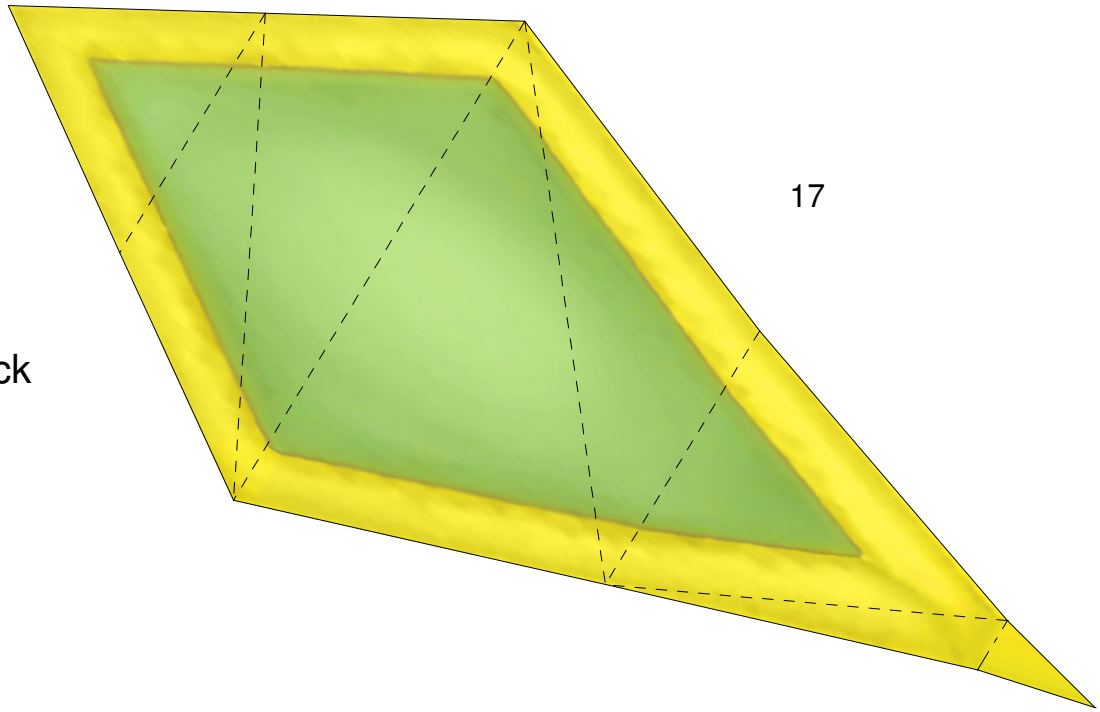

17

left
back

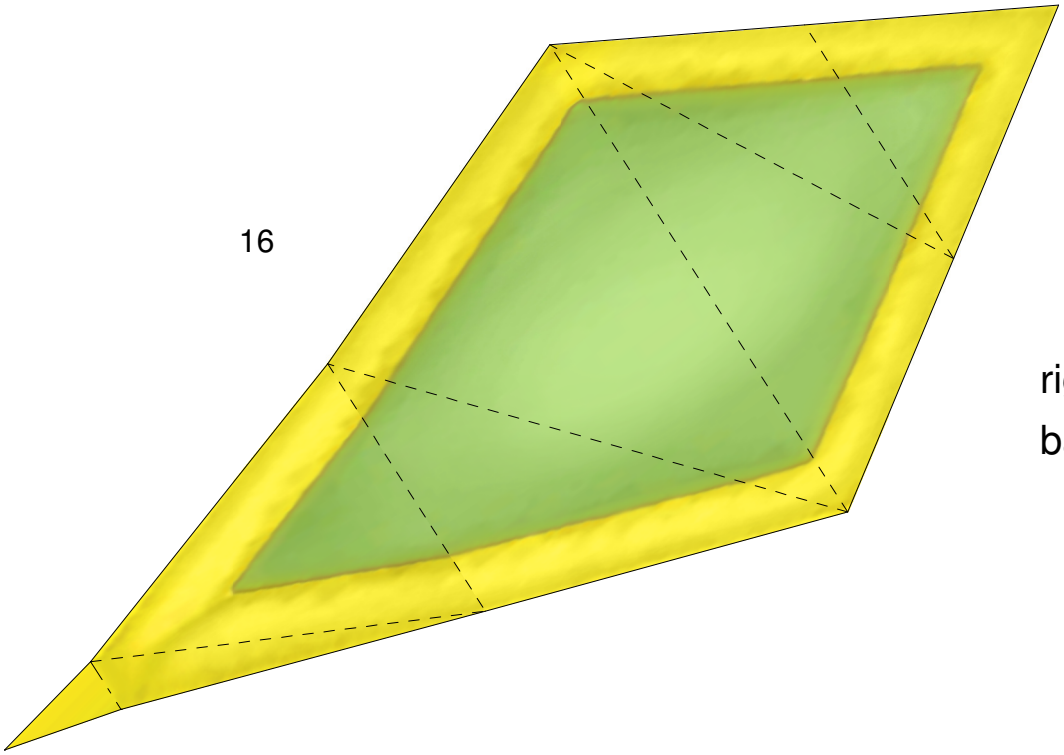

16

right
back

print this page on
normal printer paper
(80 gsm)